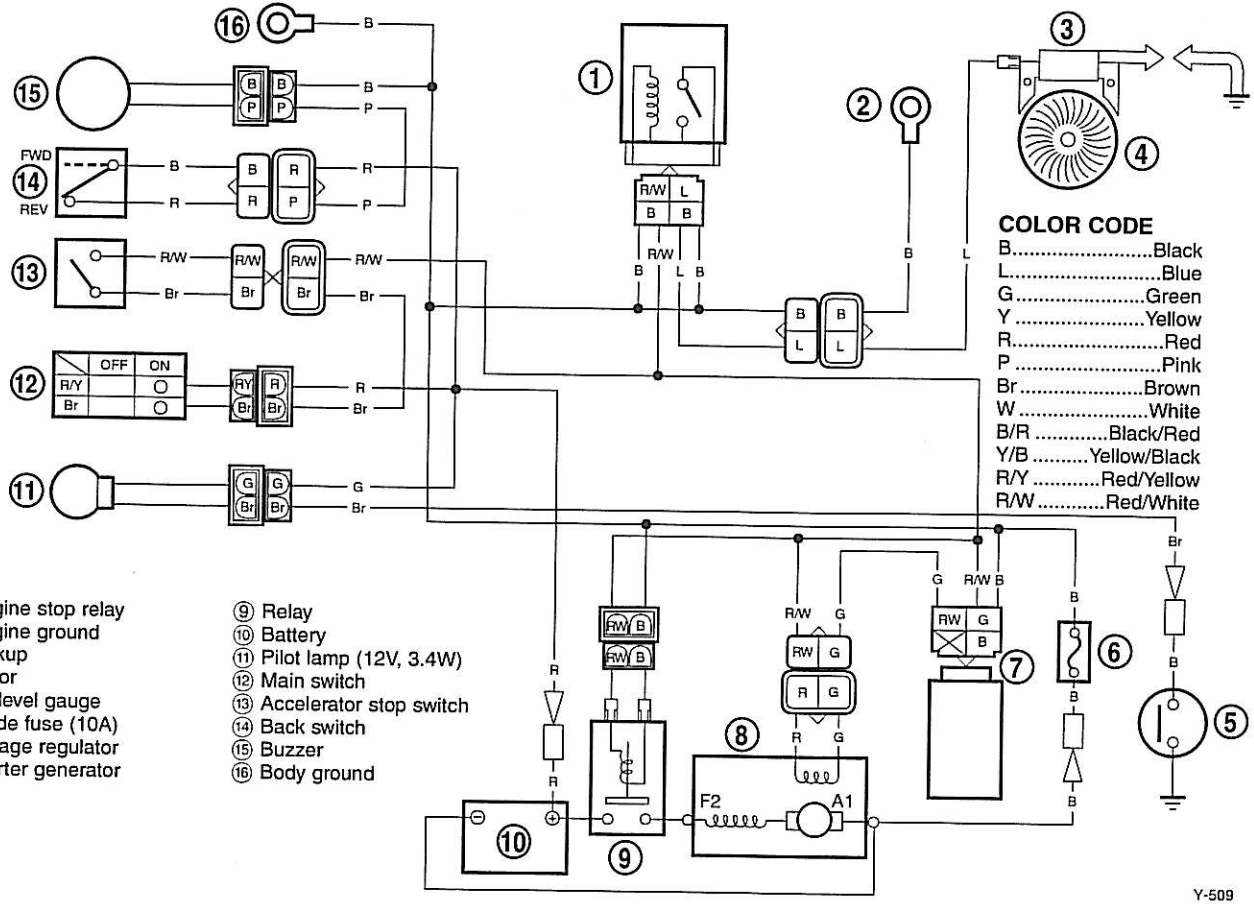

① Engine stop relay
② Engine ground
③ Pickup
④ Rotor
⑤ Oil level gauge
⑥ Blade fuse (10A)
⑦ Voltage regulator
⑧ Starter generator
⑨ Relay
⑩ Battery
⑪ Pilot lamp (12V, 3.4W)
⑫ Main switch
⑬ Accelerator stop switch
⑭ Back switch
⑮ Buzzer
⑯ Body ground